PRODUCT

20oz Aquafina – "Dimple Bottle"

SET UP GUIDE UNIVENDOR-2

Product	CAM POSITION	BACK SPACER	GAGE BAR	Sold out Lever	SIDE SHIM	GAGE BAR CLIP		BOTTLE GUIDE
						Part No.	Position	
20oz Aquafina	2	13	#1 FRONT #2 BACK	1083449 SHORT	1074465 THREE	1066112	1	1120694

Note: To properly vend this product, the Univendor-2 must have the columns setup correctly.

GAGE BAR CLIP SET UP.

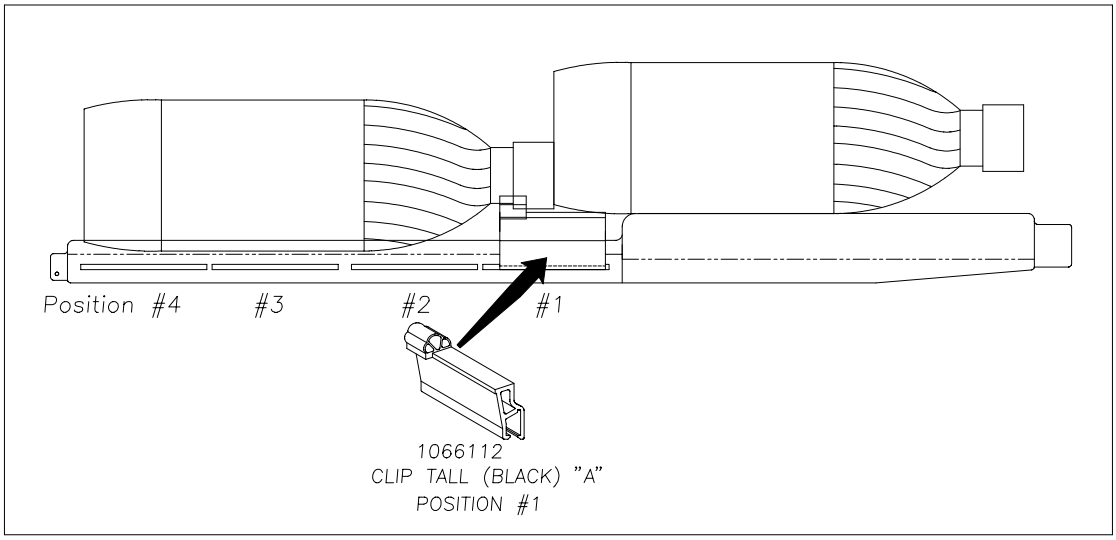

SET UP GUIDE.

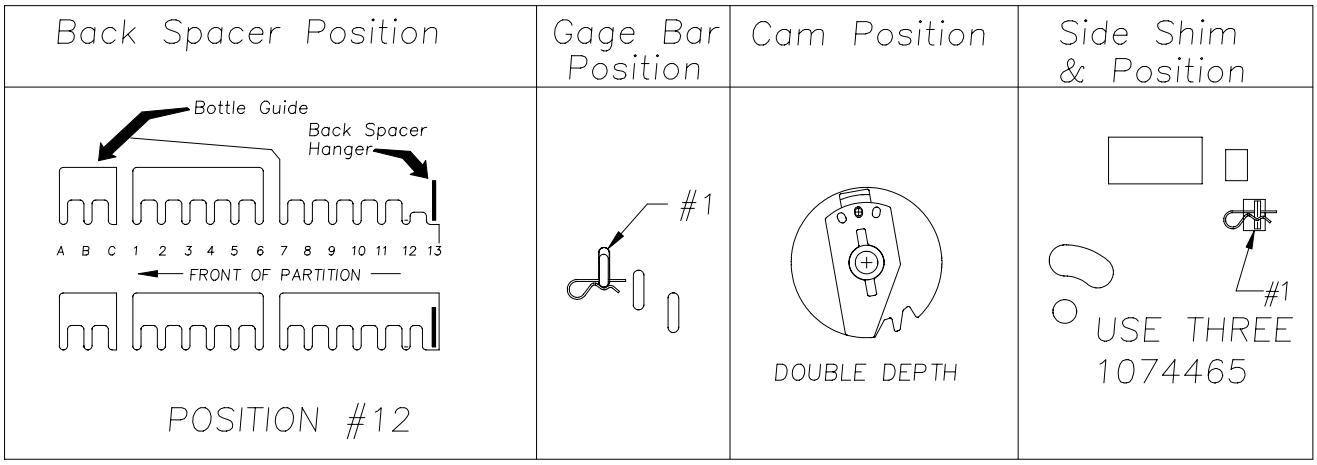

Bottle Guide Position Set-Up: (requires kit #1120694) Right Hand Partition set in C position, Left Hand Partition set in B position.

SOLD-OUT LEVER TO BE SHORT STYLE WITH NEW FRONT SPACER #1077457. Spring to be located on the right side (low pressure setting).

FOR OTHER PRODUCT SET UP GUIDES CONTACT VENDO COMPANY.
TEL: (559) 439-1770 FAX: (559) 439-2083.

INSTALLATION INSTRUCTION #1124075