Vendo® Engineering 511 72"Uni-2 *Set Up Guide*

Size: 8.3-8.4oz /246-250ML 2.09 x 5.19 (53mm x 131.8mm) **Rev. A** **Date 03/13/02**
Pkg. Description/Type: ENERGY DRINKS - CANS
Franchise: GENERIC **KIT#**

Column Setup

Cam Setting	Back Spacer	Neck Guide Location	Gage Bar Clip Location	Gage Bar Location	Magnetic Column Spacer (**)	Side Spacer	Sold Out Flap (*)	Sold Out Spacer
3	9	N/A	See Detail	#3	1 pkg of 2 1114348-8	1122166-1 Loc. #2	Short 1083449	1077457

Note: To properly vend product the Uni-2 must have the columns set up as illustrated. *Install spring on right (Low Tension) side
The 250ml product must be vended on the right side of mixed product. (Jam will occur if adjacent right gage bar is in slot #1)
****Install magnetic column spacers into right side of partition above product side spacer (See Figure 1 for installation detail)**

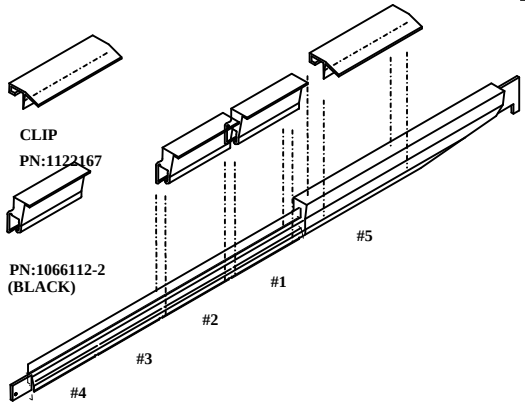

Gage Bar Clip Location

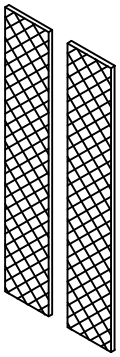

PN:1114348-8

Column Spacers

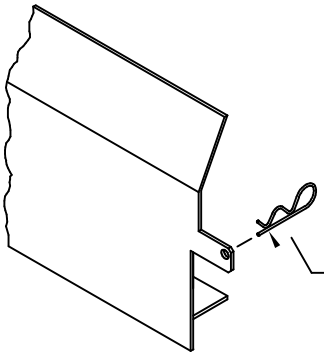

PN:1032526

PN:1122166-1

Spacer

Set Up Guide

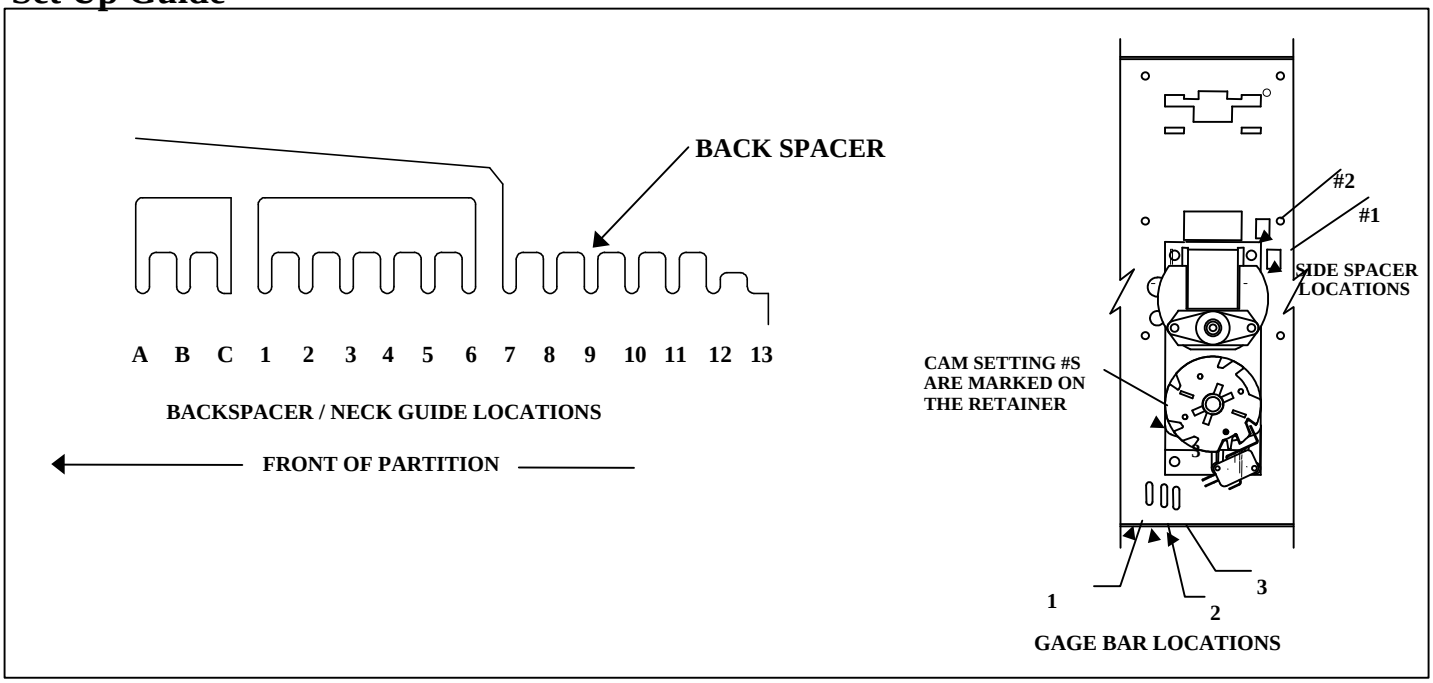

FOR OTHER PRODUCT SET-UP GUIDES, CONTACT THE VENDO COMPANY.
TEL: (559) 439-1770 FAX: (559) 650-3455.

Installation Instruction #

<u>Caution:</u> Disconnect power cord from power source before beginning installation

<u>Installation (see Figure 1)</u>

Step #1 Locate Back Spacer into position #9.

Step #2 Install .74 product side spacer (P/N1122166-1).

Step #3 Install pkg. of two 31.8” long magnetic foam pads (P/N1114348-8) on the right side partition.

Locate pads as shown in Figure 1 above the .74 product side spacer (P/N1122166-1)

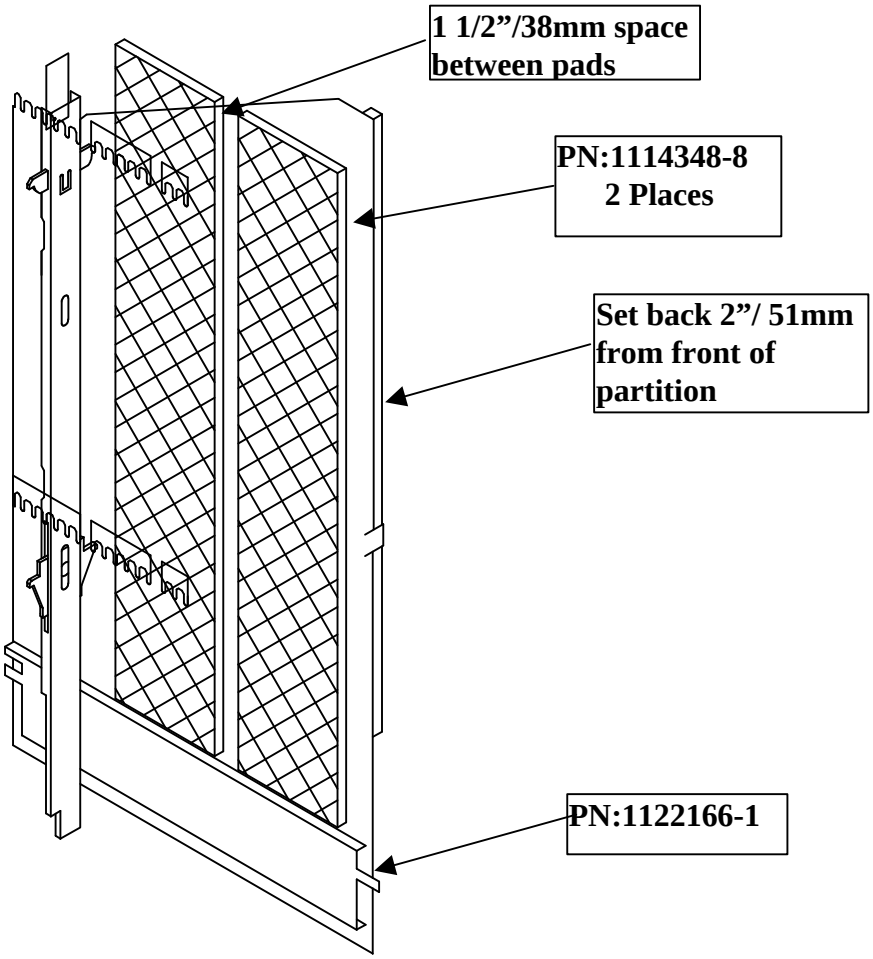

Figure 1

Right Side Partition