Vendo® Engineering *Uni-2 Set Up Guide*

Size: 500ml **Rev. A** **Date 02/28/01**

Pkg. Description/Type: CLEAR CHOICE WATER - PET

Franchise: PEPSI COLA - MEXICO **KIT#**

Column Setup

Cam Setting	Back Spacer	Neck Guide Locations	Gage Bar Clip Location	Gage Bar Location	Side Spacer	Sold Out Flap	Sold Out Spacer
2	11	N/A	C/#1	#2	1060686 Loc. #2	Short* 1083449	1077457

Note: To properly vend product the Uni-2 must have the columns set up as illustrated. *Spring Loc. Rt (Low Tension) side.

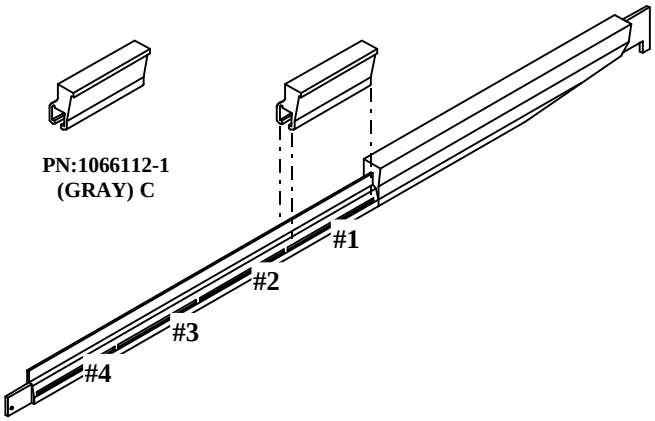

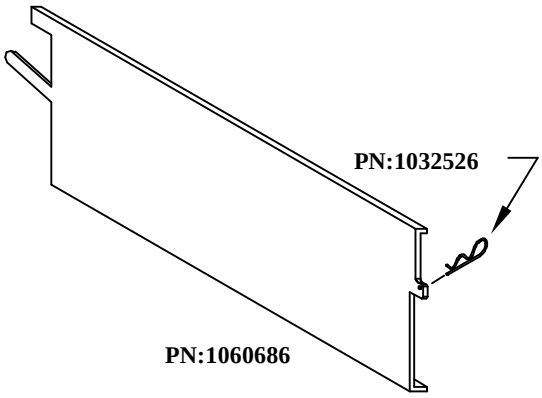

Gage Bar Clip Location

Shim/Spacer

Set Up Guide

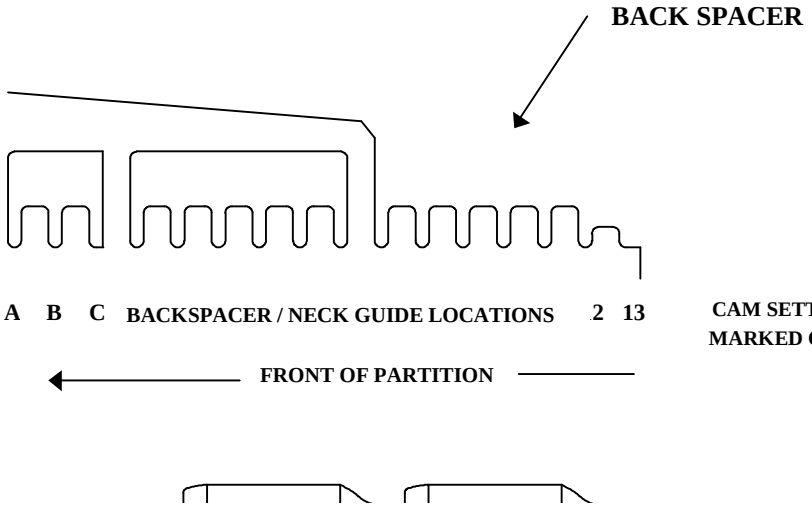

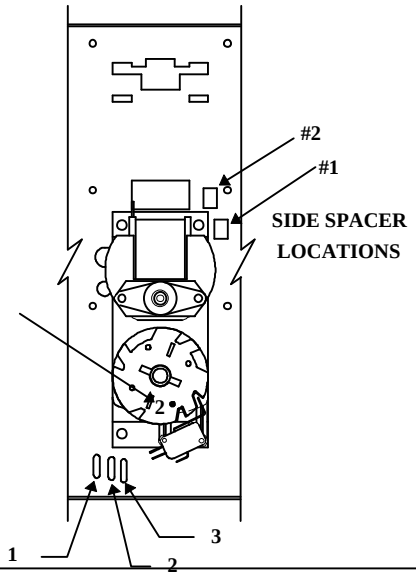

Note: Placement of bottle caps is to the back of the vendor

Installation Instruction #

FOR OTHER PRODUCT SET-UP GUIDES, CONTACT THE VENDO COMPANY
TEL: (559) 439-1770 FAX: (559) 650-3455.

Installation Instruction #