1. **PRODUCT**

   20 OZ. PEPSI PET SHORT TOP

2. **PRODUCT CAPACITY**

   28 PER COLUMN - 72", 34 PER COLUMN - 79"

3. **SET UP GUIDE UNIVENDOR-2**

Product	CAM POSITION	BACK SPACER	GAGE BAR	Sold out Lever	SIDE SHIM	GAGE BAR CLIP	
						Part No.	Position
20 oz PEPSI	2	12	1	1083449 Short & 1077457 S/0 Spacer	TWO 1074465	1066112	1

Note: To properly vend 20 oz. Pepsi Short Top, the Univendor-2 must have the columns setup correctly. Failure to do so may result in a False Sold Out, or Product Jamming

4. **GAGE BAR CLIP SET UP.**

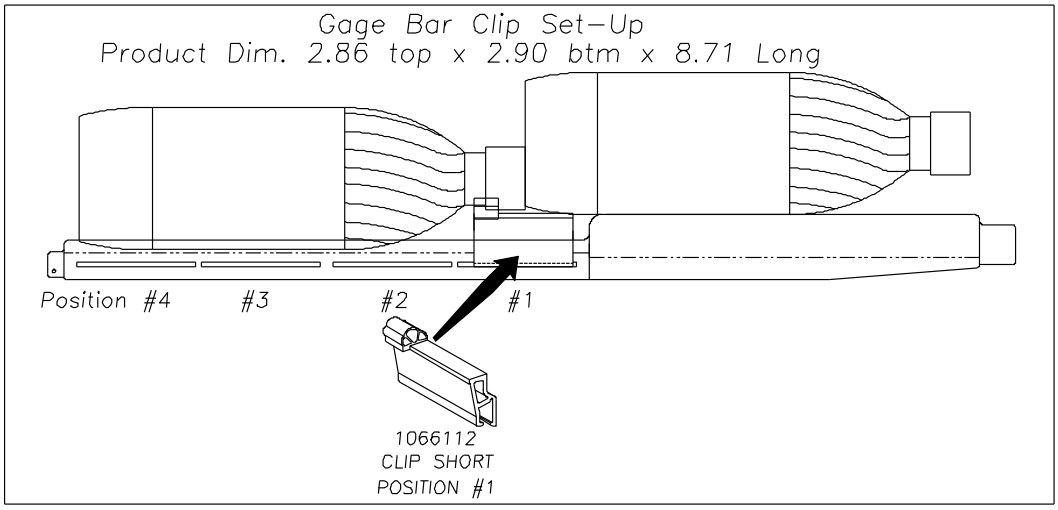
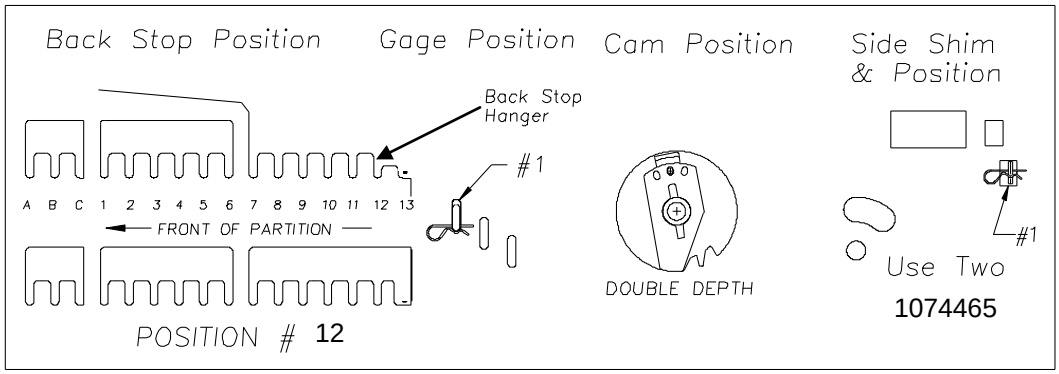
5. **SET UP GUIDE.**