1. **PRODUCT**

   281 ML, 9.5 OZ. STARBUCK COFFEE CAN - 2.37 x 4.86 Long

2. **PRODUCT CAPACITY**

   51 PER COLUMN - 72", 60 PER COLUMN - 79"

3. **SET UP GUIDE UNIVENDOR-2**

Product	CAM POSITION	BACK SPACER	GAGE BAR	Sold out Lever	SIDE SPACER	GAGE BAR CLIP	
						Part No.	Position
281 ML Starbuck	3	8	2 Front 3 Rear	389242 SHORT	1069791	TWO 1066104	1 2

Note: To properly vend 281 ML Starbuck. The Univendor-2 must have the columns setup correctly.

4. **GAGE BAR CLIP SET UP.**

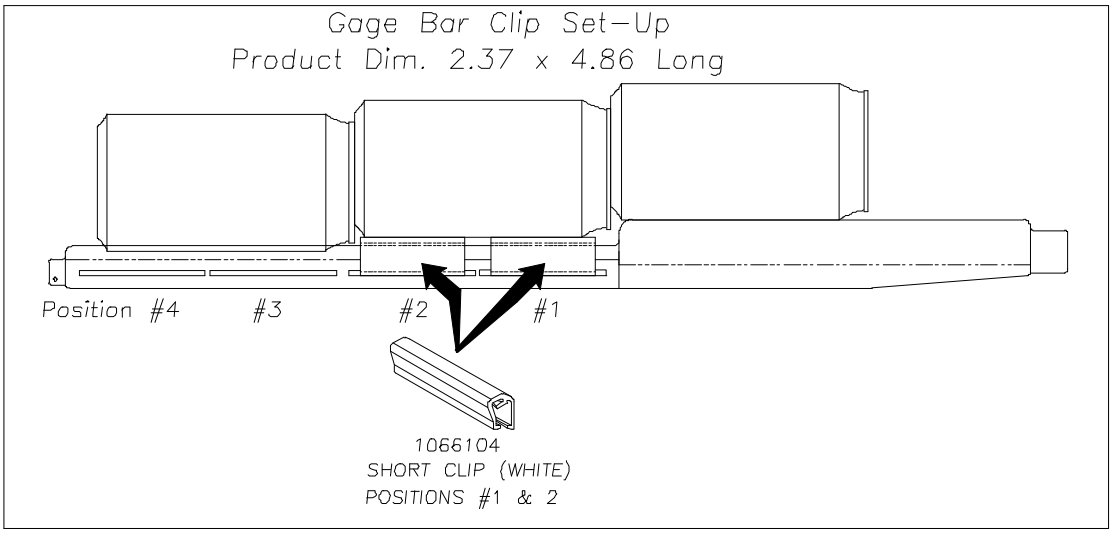

5. **SET UP GUIDE.**

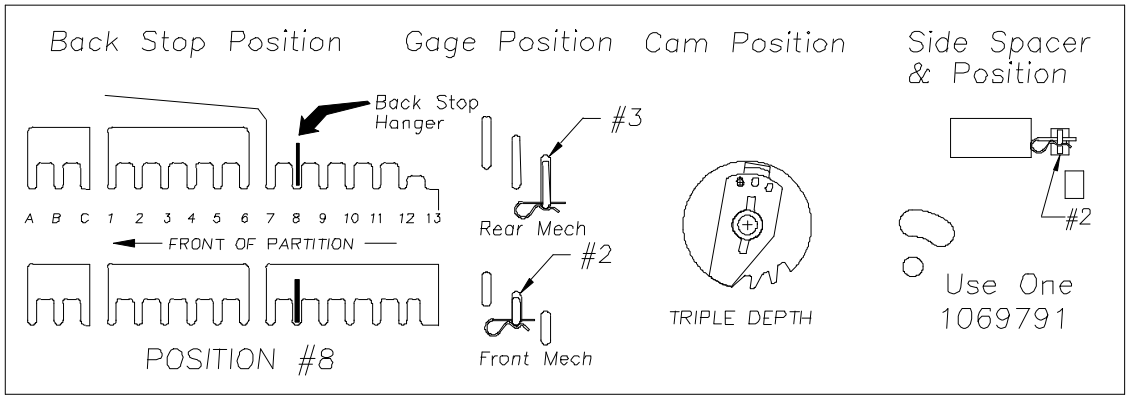

6 . **SOLD-OUT LEVER TO BE SHORT STYLE WITH FRONT SPACER.**
SPRING TO BE LOCATED ON THE RIGHT SIDE (LOW PRESSURE SETTING).