1. PRODUCT

600ML PEPSI LIPTON BRISK ICE TEA PET 12 SWIRL TOP - 2.85 Top x 2.87 Btm x 8.67 Long

2. PRODUCT CAPACITY

28 PER COLUMN - 72", 34 PER COLUMN - 79"

3. SET UP GUIDE UNIVENDOR-2

Product	CAM POSITION	BACK SPACER	GAGE BAR	Sold out Lever	SIDE SHIM	GAGE BAR CLIP Part No.	GAGE BAR CLIP Position	BOTTLE GUIDE
600ml Lipton	2	12	1	389242 SHORT	1074465 TWO	1066112	1	1088236

Note: To properly vend 600ml Lipton. The Univendor-2 must have the columns setup correctly.

4. GAGE BAR CLIP SET UP.

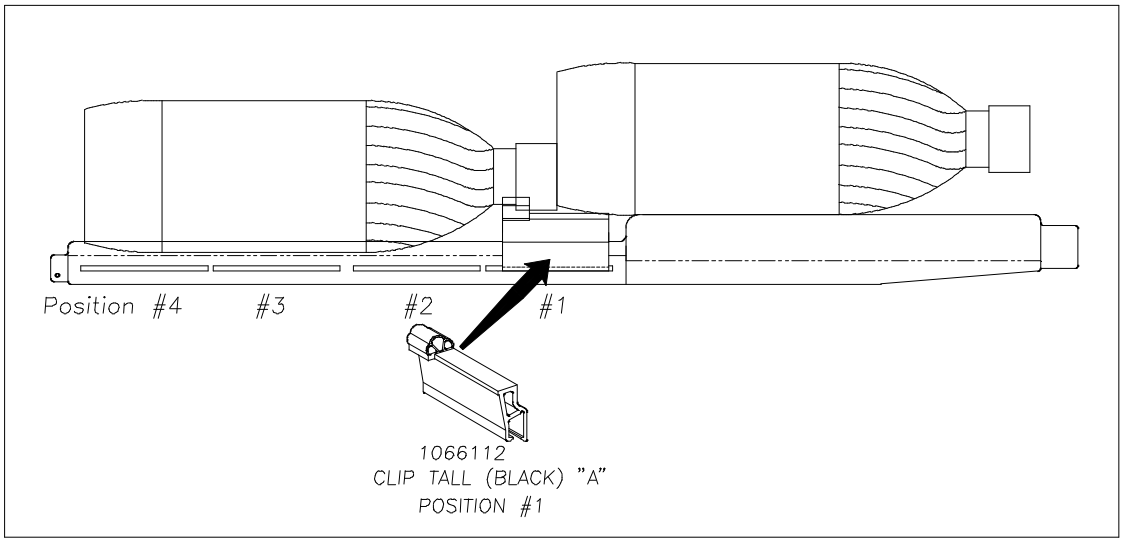

5. SET UP GUIDE.

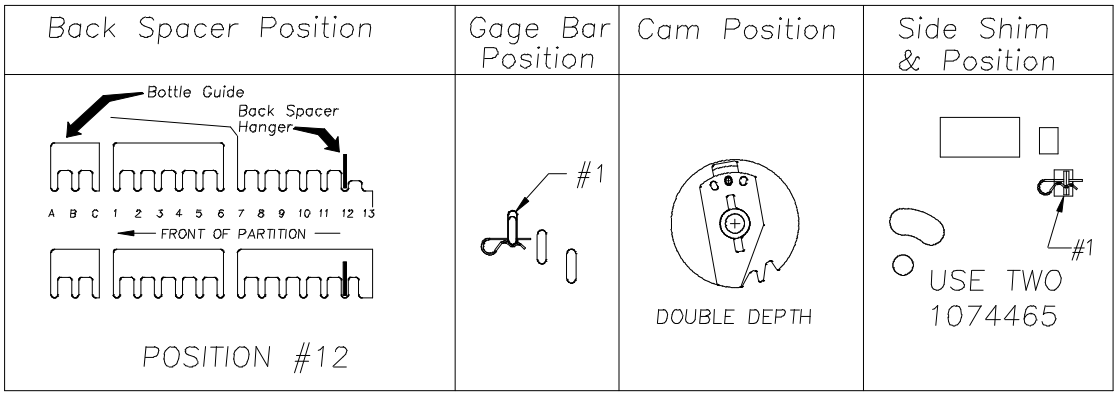

6. Bottle Guide Position Set-Up: (requires kit #1088236) Right Hand Partition set in C position, Left Hand Partition set in B position.

7. SOLD-OUT LEVER TO BE SHORT STYLE WITH NEW FRONT SPACER #1077457: Spring to be located on the right side (low pressure setting).

8. FOR OTHER PRODUCT SET UP GUIDES CONTACT VENDO COMPANY.
TEL: (209) 439-1770 FAX: (209) 439-2083.