1. PRODUCT

20 OZ. PEPSI LIPTON BRISK ICE TEA PET SWIRL TOP - 2.86 Top x 2.90 Btm x 8.71 Long

2. PRODUCT CAPACITY

28 PER COLUMN - 72", 34 PER COLUMN - 79"

3. SET UP GUIDE UNIVENDOR-2

Product	CAM POSITION	BACK SPACER	GAGE BAR	Sold out Lever	SIDE SHIM	GAGE BAR CLIP	
						Part No.	Position
20 oz PEPSI	2	13	1	389242 SHORT	TWO 1066821	1066112	1

Note: To properly vend 20 oz. Lipton. The Univendor-2 must have the columns setup correctly.

4. GAGE BAR CLIP SET UP.

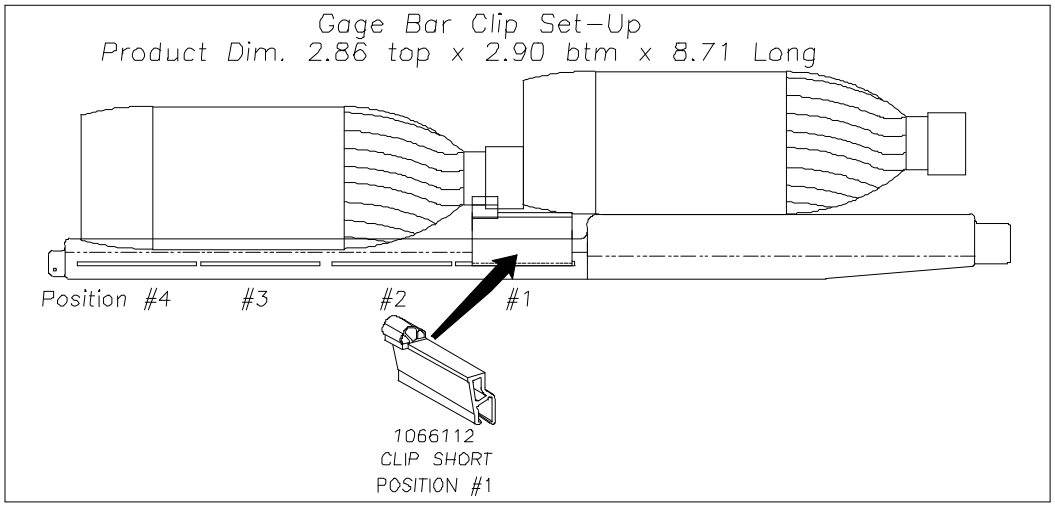

5. SET UP GUIDE.

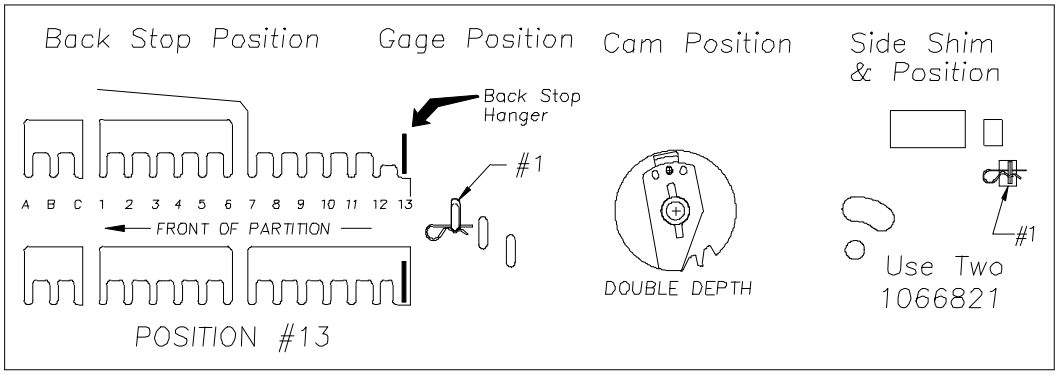

6. SOLD-OUT LEVER TO BE SHORT STYLE WITH FRONT SPACER.
SPRING TO BE LOCATED ON THE RIGHT SIDE (LOW PRESSURE SETTING).