Vendo® Engineering *Uni-2 Set Up Guide*

Size: 16oz / 473ml **Rev. A** **Date 4/17/2000**

Pkg. Description/Type: OCEAN SPRAY PET

Franchise: OCEAN SPRAY **KIT#**

Column Setup

Cam Setting	Back Spacer	Neck Guide Locations	Gage Bar Clip Location	Gage Bar Location	Side Spacer	Sold Out Flap	Sold Out Spacer
2	7	N/A	C/#1	#1	2-1074465 Loc. #1	Short 1083449	1077457

Note: To properly vend product the Uni-2 must have the columns set up as illustrated.

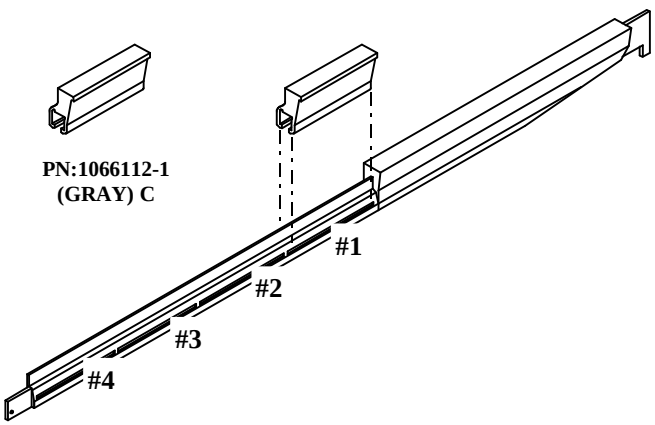

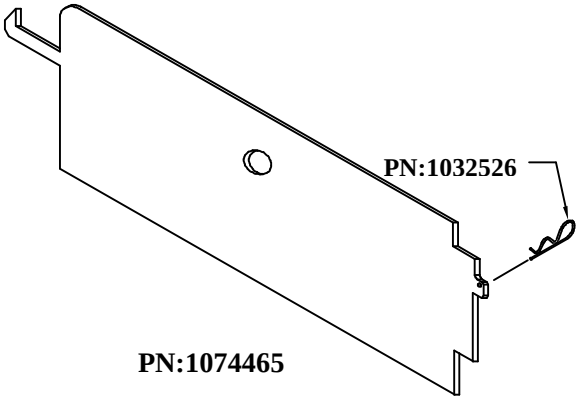

Gage Bar Clip Location

Shim/Spacer

Set Up Guide

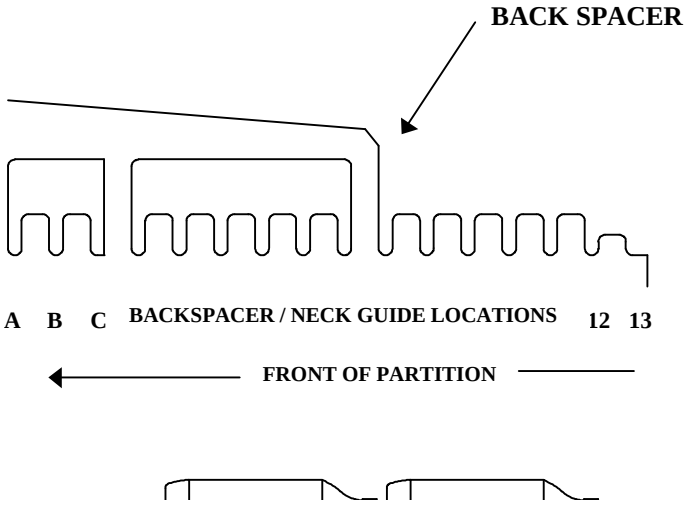

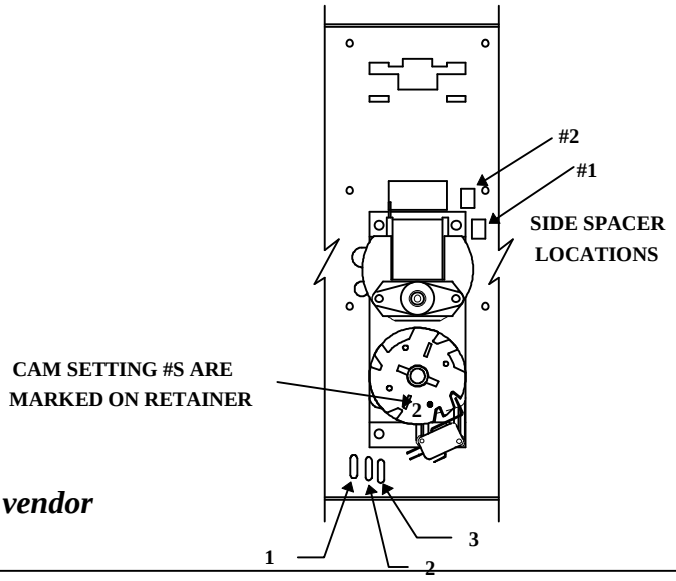

GAGE BAR LOCATIONS

Note: Placement of bottle caps is to the back of the vendor

Installation Instruction #

FOR OTHER PRODUCT SET-UP GUIDES, CONTACT THE VENDO COMPANY.
TEL: (559) 439-1770 FAX: (559) 439-2083.

Installation Instruction #