1. **PRODUCT**

   20 OZ. PEPSI PET 18 SWIRL TOP - 2.86 Top x 2.86 Btm x 8.61 Long

2. **PRODUCT CAPACITY**

   28 PER COLUMN - 72", 34 PER COLUMN - 79"

3. **SET UP GUIDE UNIVENDOR-2**

Product	CAM POSITION	BACK SPACER	GAGE BAR	Sold out Lever	SIDE SHIM	GAGE BAR CLIP	
						Part No.	Position
20 oz PEPSI	2	13	1	389242 SHORT	**TWO 1066821	1066112	1

Note: To properly vend 20 oz. Pepsi. The Univendor-2 must have the columns setup correctly.
** two flat shims are optional for the 18 swirl, will not effect the product from vending.

4. **GAGE BAR CLIP SET UP.**

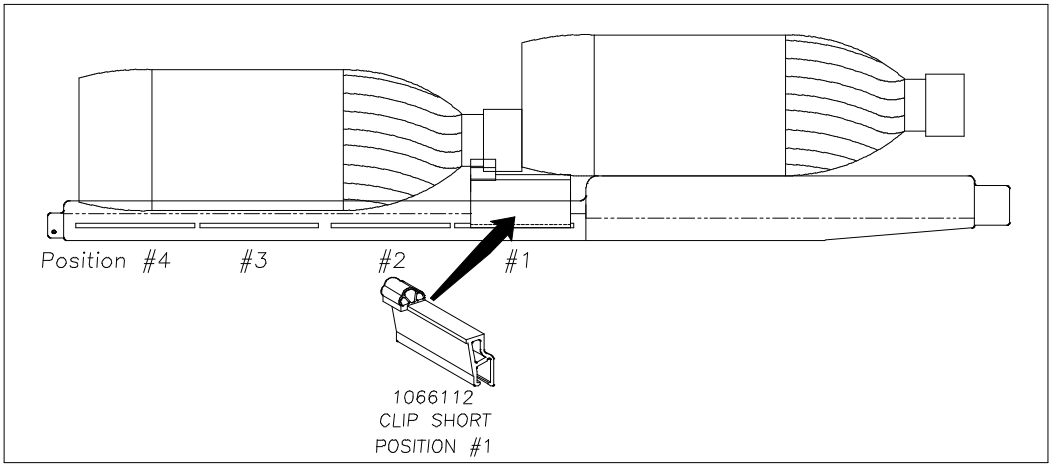

5. **SET UP GUIDE.**

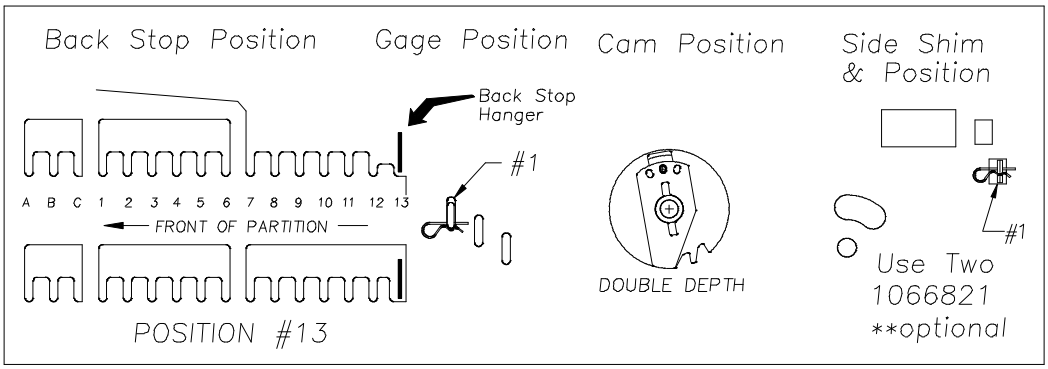

6. **SOLD-OUT LEVER TO BE SHORT STYLE WITH NEW FRONT SPACER #1077457. SPRING TO BE LOCATED ON THE RIGHT SIDE (LOW PRESSURE SETTING).**

7. **FOR OTHER PRODUCT SET UP GUIDES CONTACT VENDO COMPANY. TEL: (209) 439-1770 FAX: (209) 439-2083.**