1. **PRODUCT**

   600ML AQUAFINA PET 12 SWIRL TOP - 2.85 Top x 2.87 Btm x 8.63 Long

2. **PRODUCT CAPACITY**

   28 PER COLUMN - 72", 34 PER COLUMN - 79"

3. **SET UP GUIDE UNIVENDOR-2**

Product	CAM POSITION	BACK SPACER	GAGE BAR	Sold out Lever	SIDE SHIM	GAGE BAR CLIP Part No.	GAGE BAR CLIP Position	BOTTLE GUIDE KIT
600ml Aquafina	2	12	1	389242 SHORT	1074465 TWO	1066112	1	1120694

Note: To properly vend Aquafina. The Univendor-2 must have the columns setup correctly.

4. **GAGE BAR CLIP SET UP.**

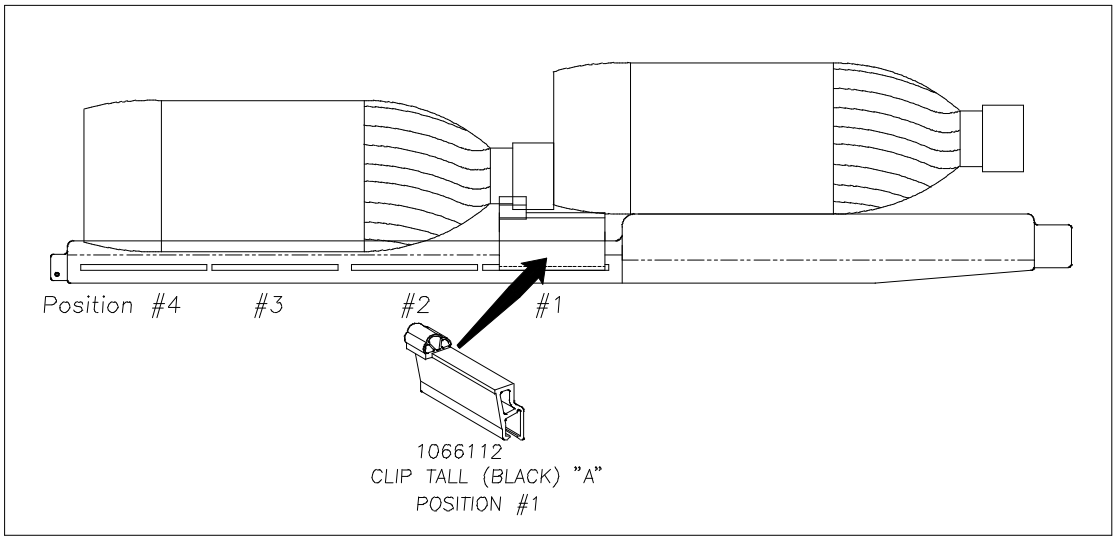

5. **SET UP GUIDE.**

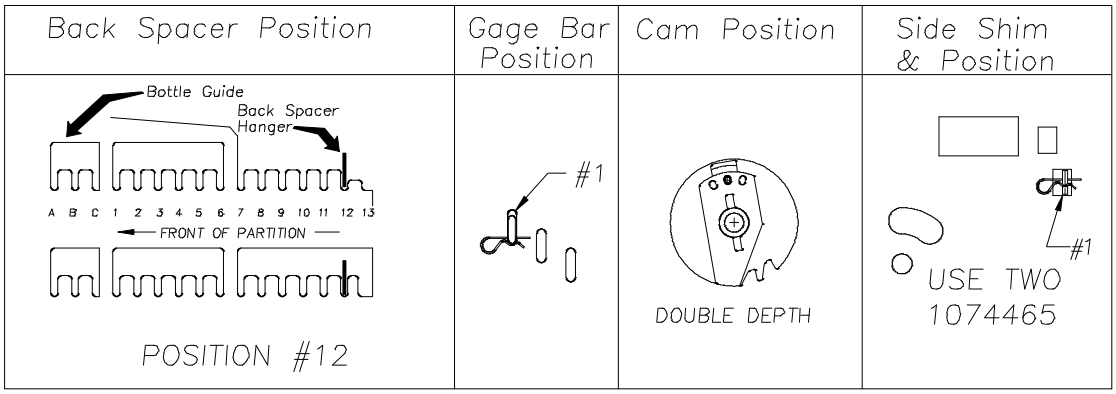

6. **Bottle Guide Position Set-Up: (requires kit #1120694)**
   Right Hand Partition set wire guide in C position, Left Hand Partition set wire guide in B position.
7. **SOLD-OUT LEVER TO BE SHORT STYLE WITH NEW FRONT SPACER #1077457: Spring to be located on the right side (low pressure setting).**
8. **FOR OTHER PRODUCT SET UP GUIDES CONTACT VENDO COMPANY.**
   TEL: (559) 439-1770 FAX: (559) 439-2083.